Vacuum Flow

ZH-X226/X249/X338

High-flow blow Max. 1550 L/min (ANR) and vacuum Max. 880 L/min (ANR) can be performed by supplying compressed air.

L/min (ANR)

Model	Suction flow rate	Discharge flow rate	Air consumption
ZH-X226	405	700	297
ZH-X338	880	1550	570
ZH10-B-X249	820	1160	340

At 0.5 MPa supply pressure

Series Map

Vacuum pressure*1

–40 kPa

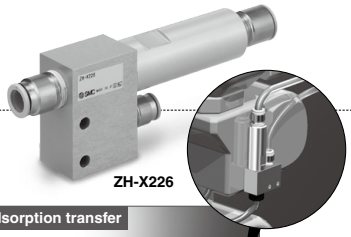

ZH-X226

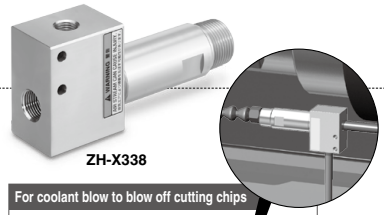

ZH-X338

For adsorption transfer

· Improved responsiveness due to large flow rate
· For the adsorption transfer of workpieces with leakage

For coolant blow to blow off cutting chips

· Increased coolant blow pressure due to compressed air
· Improved blow capacity

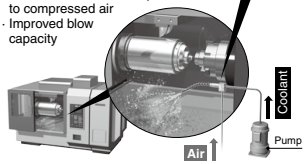

The seal material can be changed according to the coolant type.

–22 kPa

Blade hose piping type

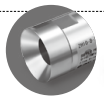

With spread adaptor

ZH10-B-X249

For water droplet removal

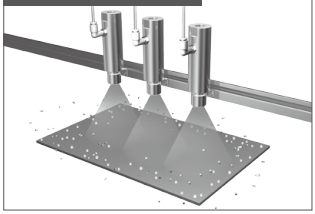

⚠ Caution

The applications described here are for reference purposes only. Therefore, the system function is not guaranteed. For actual use, please conduct thorough evaluation and validation testing in order to determine the feasibility under your actual operating conditions.

* The body is made of aluminum. Take corrosion into consideration during liquid collection, and take wear caused by the workpiece into consideration during transfer/collection.

–6 kPa

ZH10 to 40-X185

Suction flow rate	523 to 3400
Discharge flow rate	700 to 4730
Air consumption	177 to 1330

For details, refer to page 857 and onward.

*1 Vacuum pressure at 0.5 MPa supply pressure

Flow rate L/min (ANR)

Vacuum Flow
ZH-X226

Model/Specifications

Model	ZH-X226
Body material	Aluminum alloy
Seal material	NBR
Passage diameter	ø8
C [dm³/(s·bar)] (Effective area [mm²])∗1	0.83 (4.13)
Fluid	Air
Supply pressure range	0 to 0.7 MPa
Ambient and fluid temperatures [°C]	–5 to 80 (No freezing or condensation)
Weight [g]	240

∗1 The C value and the effective area are theoretical values.

Exhaust Characteristics

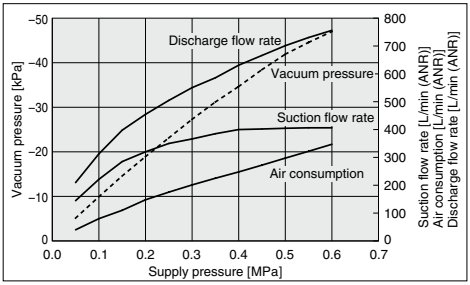

This data was acquired under SMC's measurement conditions. Therefore, the characteristics are not guaranteed. In addition, the data shows representative values and the performance may change depending on the piping conditions, etc. Be sure to conduct tests on the actual equipment to test for compatibility with the intended application.

Dimensions

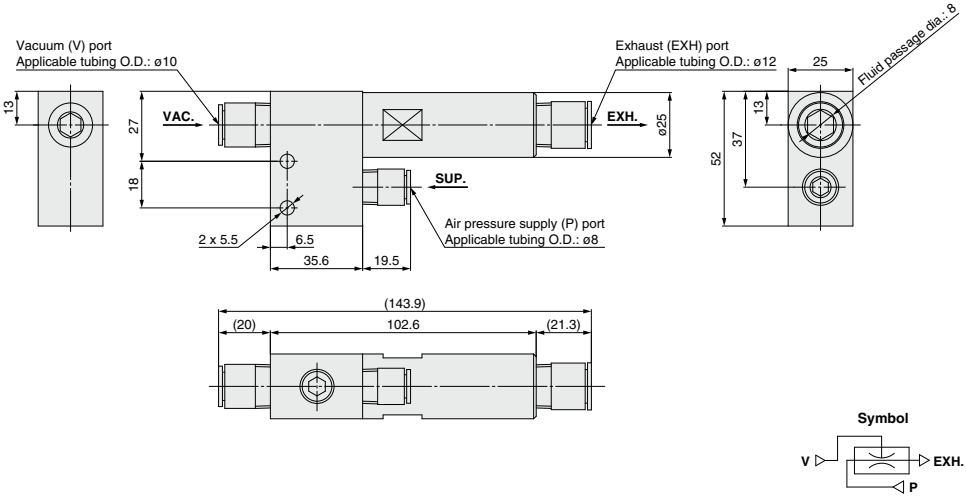

Symbol

⚠ Specific Product Precautions

Be sure to read this before handling the products. For safety instructions and vacuum equipment precautions, refer to pages 33 to 36.

Operating Precautions

⚠ Warning

1. **Because suctioned matter is ejected together with the exhaust, do not direct an exhaust port at a person or other equipment.**
2. **Do not use in an atmosphere which contains corrosive gases, chemicals, organic solvents, sea water, water steam, or where there is direct contact with any of these.**

Vacuum Flow
ZH-X338

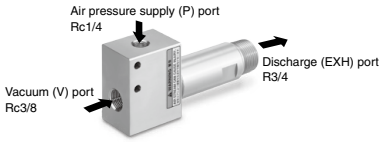

Model/Specifications

Model	ZH-X338
Body material	Aluminum alloy
Seal material	NBR
Passage diameter	ø12
C [dm³/(s·bar)] (Effective area [mm²])∗1	1.58 (7.92)
Fluid	Air
Supply pressure range	0 to 0.7 MPa
Ambient and fluid temperatures [°C]	−5 to 80 (No freezing or condensation)
Weight [g]	328

∗1 The C value and the effective area are theoretical values.

∗ Refer to page 862 for specific product precautions.

Exhaust Characteristics

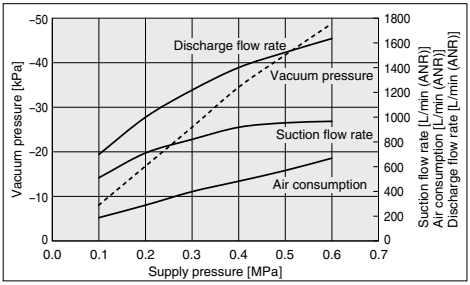

This data was acquired under SMC's measurement conditions. Therefore, the characteristics are not guaranteed. In addition, the data shows representative values and the performance may change depending on the piping conditions, etc. Be sure to conduct tests on the actual equipment to test for compatibility with the intended application.

Dimensions

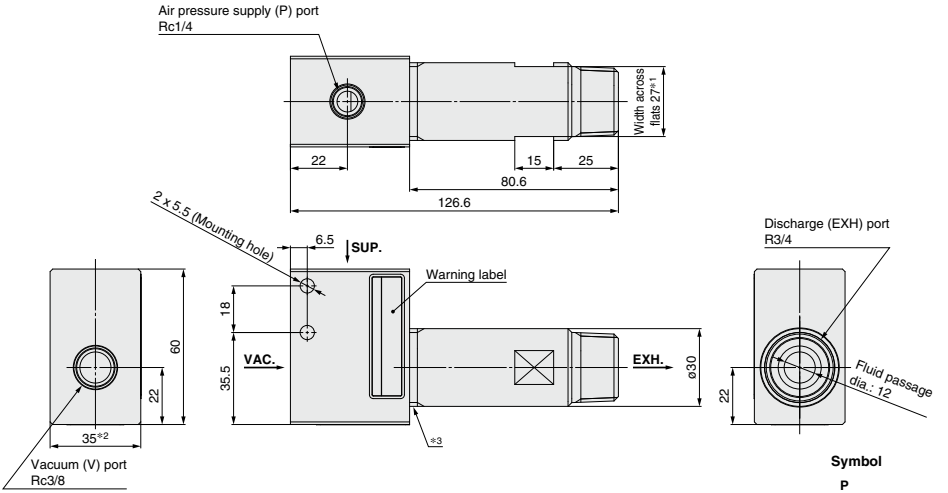

Symbol

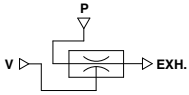

∗1 When connecting (or removing) piping, etc., to the exhaust (EXH) port, be sure to hold the width across flats.
∗2 When connecting (or removing) piping, etc., to the air pressure supply (P) port or the vacuum (V) port, be sure to hold the sides of the body.
∗3 If torque is applied to this thread part, the performance of the product may be affected.

Vacuum Flow
ZH10-B-X249

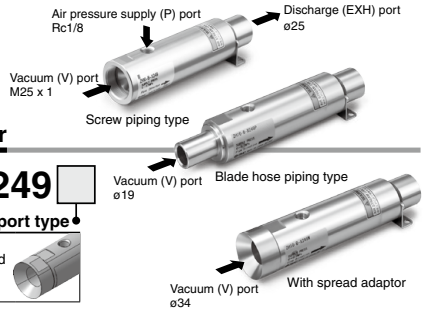

How to Order

ZH10 − B − X249 [ ]

Suction port type

Nil	Screw piping type 	**P**	Blade hose piping type 	**W**	With spread adaptor

Specifications

Model	ZH10-B-X249	ZH10-B-X249P	ZH10-B-X249W
Body material	Aluminum alloy		
Seal material	NBR		
Passage diameter	ø11.5		
C [dm³/(s·bar)] (Effective area [mm²])∗1	0.94 (4.72)		
Fluid	Air		
Supply pressure range	0 to 0.7 MPa		
Ambient and fluid temperatures [˚C]	−5 to 80 (No freezing or condensation)		
Weight [g]	250	267	278

∗1 The C value and the effective area are theoretical values.

∗ Refer to page 862 for specific product precautions.

Exhaust Characteristics

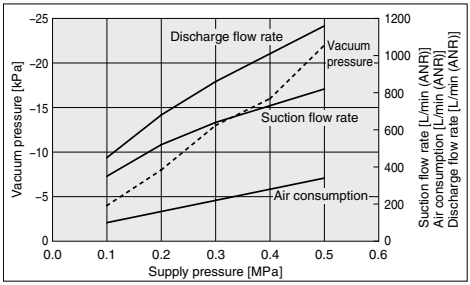

This data was acquired under SMC's measurement conditions. Therefore, the characteristics are not guaranteed. In addition, the data shows representative values and the performance may change depending on the piping conditions, etc. Be sure to conduct tests on the actual equipment to test for compatibility with the intended application.

Dimensions